creavit belgium



# WQ TOILET

WQ320-11CB00E-0000

| | |
|---|---|
| WQ320-11CB00E-0000 | WQ Smart Toilet (White) |
| KC3003.01.0000E | WQ Smart Wall Hung Pan Toilet (White) |

| | |
|---|---|
| Qty of Box: | 12 |
| Weight: | 32,4 kg |

## TECHNICAL DRAWING

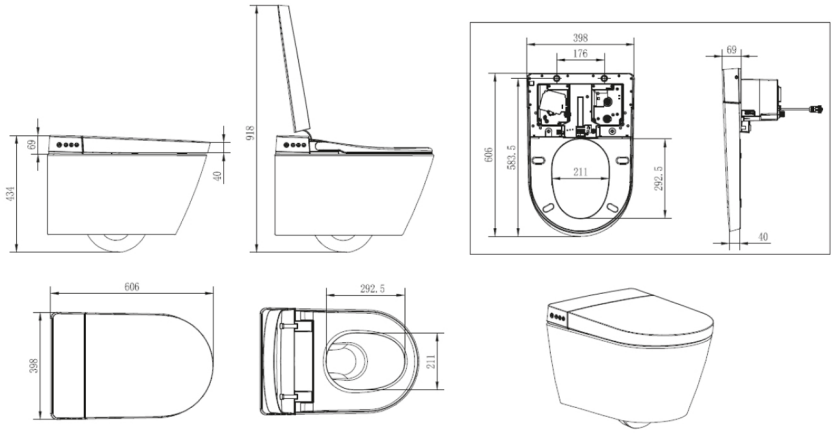


## SPECIFICATIONS